Perception, 1980, volume 9, pages 435–449

An invariant for wheel-generated motions and the logic of its determination

Dennis R Proffitt¶
Department of Psychology, Gilmer Hall, University of Virginia, Charlottesville, Virginia 22901, USA
James E Cutting§
Wesleyan University, Middletown, Connecticut 06457, USA
Received 20 November 1979, in revised form 22 February 1980

Abstract. Observers appear to perceive the paths of abstract centers of point-light configurations in making judgments about movement. For configurations on rolling wheels a metric was derived that described the relative vertical motion of this point. It was hypothesized that the smaller the metric the more the stimulus should appear to move in a wheel-like manner with linear translation. In two experiments observers viewed pairs of stimuli and were asked to select either the event that appeared most wheel-like or the one that hopped the most. Viewers consistently selected the stimulus with the smaller metric as being more wheel-like, with a frequency that increased with the difference between metrics. The inverse of this pattern was found for those observers requested to select the stimulus that hopped most. In a second set of two experiments observers drew the translational paths of these stimuli. Their drawings corresponded to the motion paths of configural centroids. Together, these results strongly suggest that observers perceive the translational component of the motion of the configurations as the path described by their centroids, or geometric centers. We propose that this description of the stimulus event is determined by the logical ordering of information extraction provided by the perceptual system, and discuss this logic and cases where it seems evident.

1 Introduction

When a moving object is observed, what motion paths describe the perception? It is easy to forget that any simple event has an indefinite number of possible mathematical descriptions. What we perceive comes bathed in certainty with little hint of underlying ambiguity. The clear and obvious perception of heavenly bodies rising and setting along circular paths above us contrasts with astronomers' assertions that quite different motions better describe the dynamics of the cosmos. Such an example serves as a reminder that perceptual experience is grounded in fundamentally ambiguous information affording multiple descriptions and interpretations.

The study of motion perception addresses two interrelated problems. The first is to describe what is perceived. An adequate description must represent the observer's experience and the information in the stimulus event that supports it. Since a single description is desired for events occurring both in the physical world and in the mental life of the observer, a descriptive language must be appropriate to both. Mathematics is such a language and the vector notation employed by Johansson (1950) has proved most useful. (See Johansson 1975, 1977, 1978, for recent theoretical reviews.) The second problem of motion perception is to discover the logic by which the perceptual system selects the perceived description of the stimulus event from the indefinite number of such descriptions that could, in principle, have been selected. This logic must show how stimulus information is disambiguated to derive perceived interpretations.

The first of these two problems is addressed in the remainder of this introduction and the experiments which follow. We provide a mathematical description for the

invariant structure of configurations of points moving as if attached to a rolling wheel, and evidence that this invariant is perceived. The second problem—concerning the logic that generates the perceived description—is, of course, inherently the more difficult. In the summary we present our solution to this problem. We also take liberties and suggest that this logic applies to events other than the few studied.

1.1 *An invariant for wheel-generated motions*

We know with certainty what is not seen when the motions of rolling wheels are observed. Since the early work of Rubin (1927) and Duncker (1929/1937) we know that an observer does not typically see the motion paths of the individual parts of a rolling wheel when the whole is viewed. Both panels of figure 1 represent a wheel rolling on a rim within the disc's outer radius, a wheel similar to those on a railroad train. Every point on such a rolling wheel, except the center, describes one of three types of cycloidal curves; the center, of course, moves along a straight horizontal line. In figure 1a the points labeled a, b, c, and d show these curves. Point a, on the outer rim of the wheel, follows a looping curve called a *curtate cycloid*; point b, within the rim on which the wheel rolls, follows a smooth arching curve called a *prolate cycloid*; point c, the center, follows a straight line; finally, point d, on the rolling-surface rim, follows a path comprised of connected arches called a *cycloid*. However, the family of cycloidal curves traced by the parts of a wheel is *not* seen when the whole is viewed. Rather the perception is of the parts revolving in circles about the center, which moves linearly, as shown in figure 1b. Indeed, the nonobvious nature of these curves is evidenced by the fact that their discovery by mathematicians cannot be documented until Galileo. (See Proffitt et al 1979, for a history of the study by both mathematicians and psychologists of wheel-generated motions.)

To understand better what is perceived when wheel-generated motions are observed, we reduced the stimulus event to configurations of lights on unseen rolling wheels (Proffitt et al 1979; Proffitt and Cutting 1979), a technique previously used to study

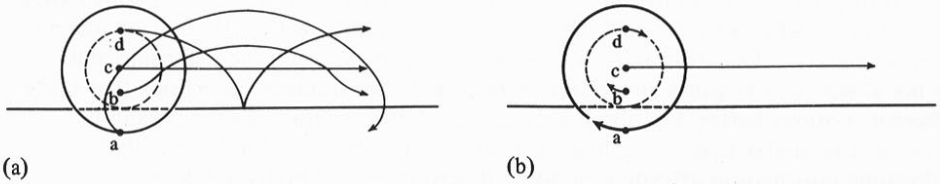

Figure 1. (a) The individual motion paths of four points, a, b, c, and d, located on a rolling wheel; (b) how they are perceived..

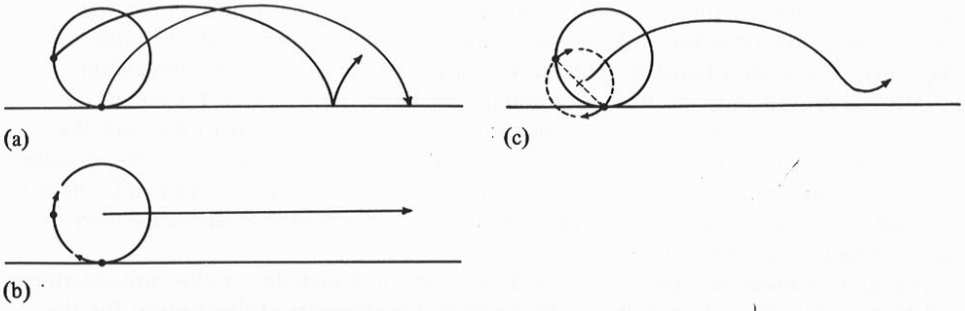

Figure 2. Each of the three panels shows a possible description for two points moving as if attached to an unseen wheel: (a) the points move individually along cycloidal paths; (b) they revolve together on circular paths about the wheel's center that moves linearly; and (c) they revolve together about their midpoint, which traces a prolate cycloid.

this phenomenon by Rubin (1927), Duncker (1929/1937), Wallach (1965/1976), and Johansson (1973, 1974). In our studies, points of lights were seen on a television monitor, and these points moved as if attached to a wheel with surround darkened. Even when only two point-lights are present on the wheel, an indefinite number of descriptions can be derived and the three panels in figure 2 show what we take to be three of the most plausible. The points could be described, as in figure 2a, to move independently along cycloidal paths. Another possible description (figure 2b) has them moving with a circular motion about an unmarked center at the hub of the wheel, which is moving linearly. The third description (figure 2c), not as obvious, shows the two points moving in circular paths about the unmarked point midway between them and this point traversing a prolate cycloid.

Our previous research and the studies reported here suggest strongly that typically only the latter description is perceived. Observers viewed configurations of one, two, three, and four point-lights. They were not told that the lights were attached to unseen wheels, but were instructed to rate on a scale from one to seven how 'wheel-like' each event appeared as it moved across the screen. When the midpoint—called the *centroid*—of the light system was at or near the center of the motion-generating wheel, the stimulus event received high ratings for wheel-likeness. Configurations with centroids at a greater distance from the wheel's center received lower ratings. A metric was derived that expressed the distance between the centroid and the center of the wheel as a proportion of the distance from the center to the light farthest from it. Figure 3 shows a configuration of two point-lights, L_1 and L_2. Midway between these lights is their centroid, C_m. This point may also be called its *center of moment* to denote that it is the point within the configuration about which rotational motion is perceived to occur. The distance between the centroid and the center of the wheel, C, is referred to as D_m, and the radius, r, for this configuration is equal to the distance between either light and the center of the wheel. Thus the metric is determined as follows:

$$\frac{D_m}{r} = \frac{C_m C}{L_1 C} \quad \text{or} \quad \frac{C_m C}{L_2 C}.$$

When in eleven different experiments, employing sixty-one different stimulus configurations, we correlated the metrics and observer ratings, the metric was found to be an extraordinarily good predictor of viewer judgments (rs ranged between −0·82 and −0·97). The greater the D_m/r metric, the less wheel-like was the movement of the stimulus judged to be and vice versa.

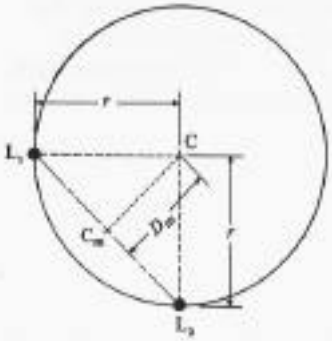

Figure 3. A stimulus is shown with two lights, L_1 and L_2, attached 90° apart on the rim of a wheel. The centroid of this configuration, C_m, is midway between them. D_m is equal to the distance of this point from the wheel's center, C, and r is equal to the distance from the center to the farthest light, in this case either L_1 or L_2.

1.2 *The manifestation of the motion invariant*

Although we employed the method described above to determine the D_m/r metric, the perceptual system cannot possibly use this means for its determination. The visual scene presents the observer with only the two lights in motion. The distance, D_m, is that between the centroid and the center of the wheel, and neither of these points is marked. Moreover, the radius, r, is the distance from the unmarked center to the light farthest from it. The information is simply not available in the event for the perceiver to derive the invariant by the method specified above.

Although the logic for the selection of motion descriptions employed by the perceptual system is discussed at greater length in the conclusion, a partial account of the processes of information extraction must be specified in order to discuss what is perceived. The simple configuration of two lights presented in figure 3 is given a dynamic description in figure 4. The two lights, L_1 and L_2, are seen to move circularly about the point midway between them, C_m. We have elected not to draw these paths in figure 4 as it is already a bit confusing; however, figure 2c shows the circular vector for this configuration and may be referred to. The circular motion from these points having been extracted, there is a residual movement remaining that describes the prolate cycloid traversed by the centroid of the configuration. The determination of this point can be made from the information in the visual scene. For a two-light system, the centroid is located midway on the line connecting the points. For a three-light system, it is determined by the method of medians (Proffitt et al 1979; Proffitt and Cutting 1979). For irregular shapes it can be determined by the following definite integrals, on the assumption that the area is defined within any arbitrarily placed coordinate system:

$$x = \int_a^b x h_x \, dx \Big/ \int_a^b h_x \, dx \,, \qquad y = \int_c^d y l_y \, dy \Big/ \int_c^d l_y \, dy \,,$$

where x and y are the coordinates for the centroid, h_x and l_y are the lengths of the bounded slices of the area taken vertically and horizontally, respectively, and a and b are the extreme values of x, and c and d are the extreme values of y. In subsequent work employing irregular shapes moving as if attached to rolling wheels, we have found that observers perceive rotational motion about the centroid and translation as the movement of the centroid. With the determination of the centroid, D_m/r can be discovered from the dynamics of this point relative to the movement of the individual lights. The centroid follows a cycloidal path with a height, cd, equal to $2D_m$. Each point for the configuration shown in figure 4 travels a vertical distance, ab, that equals $2r$. We had originally thought that r was determined from the period of the cycloidal curves, $2\pi r$ (Proffitt et al 1979); however, later research convinced us that the determination of r is based on the vertical excursion of the light most distant from the center of the generating wheel (Proffitt and Cutting 1979). (When the light most distant from the center is not on the rolling rim of the wheel, the height of its

Figure 4. The individual motion paths are shown for the two lights in figure 3 and their centroid. Each of the lights, L_1 and L_2, follows a cycloidal path of height equal to the distance ab. The centroid, C_m, describes a prolate cycloid as it moves with a vertical excursion of cd. In calculating the motion invariant D_m/r, $D_m = \frac{1}{2}$cd, and $r = \frac{1}{2}$ab.

cycloidal path does not equal twice the radius of the wheel. The radius of the wheel determines the period of all cycloids generated by it; however, the distance of a light to the center of the wheel determines its vertical excursion.) Thus, the perceived motion invariant is determined as follows:

$$\frac{D_m}{r} = \frac{cd}{ab}.$$

This relation expresses the metric as the ratio of the vertical excursion of the centroid to the limit of vertical movement possible for any point in the configuration. Thus, the centroid hops along a cycloidal path for all configurations except those which have their centroid at the wheel's center. The greater the hopping relative to the limit set by the vertical motions of the individual points, the less the motion of the configuration looks like that of a wheel. We suggest that the lights are always seen to revolve in a circular path, regardless of the location of the centroid of their configuration; however, the relative distance between the centroid and the center of the wheel determines how wheel-like the translation of the revolving whole appears.

To summarize, we have found an invariant that describes the parameters of motion for one interpretation of configurations of points moving as if attached to a rolling wheel. The interpretation is that all points revolve about the centroid of their configuration and the movement of the whole follows the path of the centroid. The centroid can be determined through analytic means and its motion invariant, D_m/r, expresses the vertical excursion of this point relative to the limit of vertical movement set by the light at the greatest distance from the center of the generating wheel.

In the present series of studies we employed more rigorous tests of the validity of the motion invariant as describing the perceptual interpretation selected by observers of wheel-generated motions. In the first experiment we showed observers pairs of stimuli and asked some to select the member that appeared most wheel-like and others to choose the one that hopped the most. The second experiment replicates the design of the first except that the stimuli employed were created with lights that were equal distances apart and D_m/r metrics that formed a ratio scale. The third and fourth experiments required observers to draw the paths of the rolling configurations.

2 Experiment 1: paired comparisons of configurations used previously

2.1 *Method*

The method of generating point-light stimuli was similar to that described in Proffitt and Cutting (1979). Dynamic stimuli were generated on a Data General Nova computer with similar FORTRAN programs, displayed on a Tektronix 604 monitor from which they were videotaped, and presented to observers on a 21 in (53·34 cm) television monitor. Two-light configurations appeared as if attached to a wheel that rolled across the screen in three revolutions at 1 rev s^{-1}, traversing a visual angle of about 15 deg for all viewers. Each light subtended a visual angle of about 10 min of arc, and stimuli subtended a maximum visual angle of 1 to 3 deg measured vertically.

Seven stimuli were generated and are shown in figure 5. Each stimulus had two lights, one of which was on the perimeter and is referred to as the reference light. The location of the second light is specified in relation to the reference light. Stimuli 1, 3, 5, 6, and 7 had both lights on the perimeter, the second placed at 180°, 135°, 90°, 60°, and 30° from the reference light, respectively. Stimuli 2 and 4 had second lights halfway between the perimeter and the center. Their locations from the reference light were 180° and 90°, respectively. The D_m/r metric is presented for each stimulus in figure 5. All seven had been previously used by Proffitt et al (1979).

A videotaped test sequence allowed the stimuli to be compared in pairs. Prior to each paired comparison a stationary light appeared in the middle of the screen,

announcing the beginning of the trial. A stimulus then proceeded to move across the screen, followed immediately by a second stimulus. Each stimulus was thus paired with every other, both as the first event of the trial and as the second, to produce a total of forty-two trials. Each pairing of events yielded a stepwise comparison. That is, since the stimuli are numbered in ascending order of their D_m/r metrics, comparisons between adjacently numbered stimuli were one-step comparisons, those numbered two apart were two-step comparisons, and so forth up to the comparison of stimulus 1 with stimulus 7, a six-step comparison. Notice that the difference between stimuli metrics, $\Delta D_m/r$, varies for pairs within stepwise comparisons. Prior to the presentation of the test sequence, observers were shown a sequence of ten practice comparisons to familiarize them with the stimuli and the task. These ten trials were comprised of the ten comparisons of greatest $\Delta D_m/r$ metrics, the three-, four-, five-, and six-step comparisons.

Thirty-five Wesleyan University undergraduate students volunteered. They participated individually or in groups of two or three, and viewed a television monitor. The observers were divided into three groups, depending on the task required of them. There were fifteen observers in the first group and ten each in the other two. Group 1 was instructed to select the stimulus in the paired comparison that appeared to look most wheel-like. For group 2, the instructions were the same; however, these observers were given a brief description of what to look for prior to the practice tape and were also given feedback after the practice on whether or not their answers were 'correct'. Group 3 was instructed to select the stimulus in the pair that hopped the most. Like group 1 this group was given no pretest tutoring or feedback.

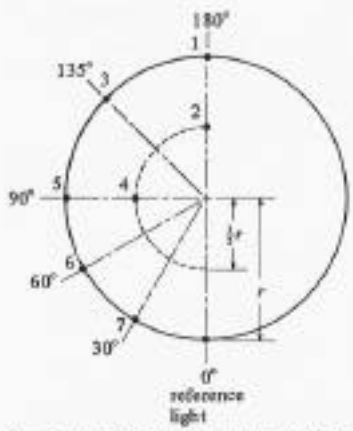

Stimulus	D_m/r
1	0·00
2	0·22
3	0·35
4	0·55
5	0·69
6	0·86
7	0·97

Figure 5. The seven stimuli used in experiment 1 are shown. Each stimulus had two lights, one of which was located on the perimeter and is referred to as the reference light. Five of the stimuli had second lights on the perimeter and two had them located halfway toward the center. The D_m/r metric for each stimulus is presented on the right.

2.2 *Results and discussion*

The results are presented in table 1 for each of the three groups. The percentages express the relative frequency that each stimulus listed vertically on the left was chosen over those listed horizontally at the top. These percentages were averaged *diagonally* to derive the stepwise comparison percentages displayed on the right. The probabilities were computed with the use of t tests for paired comparisons.

Considering first the observers in group 1, we see that they tended to choose the stimulus with the smaller D_m/r metric most frequently as the event that appeared most wheel-like. This preference became progressively more pronounced as the $\Delta D_m/r$ increased. Observers distinguished between one-step comparisons at only

slightly better than chance; however, they selected the correct stimulus with an increasing frequency as the number of steps between the pairs became greater. A repeated-measures analysis of the linear trend across the factor of 'step size' showed this trend to be highly significant ($F_{1,14} = 22 \cdot 18$; $p < 0 \cdot 001$). This same pattern of results was found for group 2 observers, who were given a small amount of pretrial training designed to improve their ability to distinguish between stimuli on the bases of the D_m/r metric. Again we see that observers report with increasing frequency that the stimulus with the smaller D_m/r metric appears to move in a more wheel-like manner as the $\Delta D_m/r$ increase for the pair (analysis of linear trend across step size: $F_{1,9} = 110 \cdot 67$; $p < 0 \cdot 001$). Given the limited nature of the pretrial training and our own experience with these stimuli, we do not believe that the results for this second group reflect the limit of accuracy that observers can achieve in discriminating the difference between the movements of these configurations. The pattern of results for group 3 was, as expected, the inverse of that found for the first two. The stimulus with the greater D_m/r metric was chosen as hopping more, with a frequency that ranged from chance for all one-step comparisons combined, to 90% (100% − 10%) for the six-step comparison between stimuli 6 and 7 (analysis of linear trend across step size: $F_{1,9} = 33 \cdot 87$; $p < 0 \cdot 001$).

The results support our contention that observers base their judgments of goodness for wheel-like motion—i.e. for points of light moving as if attached to a rolling wheel—on the relative vertical excursion of the centroid of each configuration.

Table 1. Percentage of row stimuli chosen more than column stimuli as being more wheel-like (with and without pretest tutoring) and as hopping more.

Row	Column 2	3	4	5	6	7	Stepwise comparisons[a]	
Being more wheel-like								
1	76·7***	83·3***	80·0**	90·0***	83·3***	83·3***	83·3***	(six-step)
2		30·0	76·7**	70·0*	86·7***	90·0***	86·7***	(five-step)
3			73·3*	70·0*	83·3***	73·3*	83·3***	(four-step)
4				46·7	80·0*	70·0*	75·8***	(three-step)
5					66·7	60·0	74·0***	(two-step)
6						60·0	58·9*	(one-step)
Being more wheel-like: given pretest tutoring								
1	60·0	80·0	85·0***	60·0	95·0***	100·0***	100·0***	(six-step)
2		60·0	85·0***	80·0*	95·0***	95·0***	95·0***	(five-step)
3			60·0	75·0*	95·0***	95·0***	83·3***	(four-step)
4				50·0	90·0***	85·0***	86·2***	(three-step)
5					80·0***	85·0***	83·0***	(two-step)
6						100·0***	68·3***	(one-step)
Hopping more								
1	55·0	30·0	30·0	30·0*	20·0*	10·0***	10·0***	(six-step)
2		35·0	60·0	15·0**	15·0***	15·0***	17·5***	(five-step)
3			50·0	20·0**	30·0	40·0	28·3**	(four-step)
4				20·0*	10·0**	35·0	27·5**	(three-step)
5					50·0	45·0	33·0**	(two-step)
6						55·0	44·2	(one-step)

* $p < 0 \cdot 05$; ** $p < 0 \cdot 01$; *** $p < 0 \cdot 001$; the t tests are, of course, not independent, but the pattern is shown so the reader can assess the magnitude of the results.

[a] Stepwise comparisons are computed along the diagonals of the data matrix.

The D_m/r metric is a description of this relative up-and-down movement. Observers selected as being most wheel-like those stimuli in paired comparisons with the smaller metric, a preference that increased in frequency as the $\Delta D_m/r$ became greater. Moreover, the inverse was found when the observers were asked to select the stimulus that appeared to hop the most. That is, the stimulus in the pair with the smaller D_m/r was selected less often as the event that hopped most, again the preference becoming more pronounced as $\Delta D_m/r$ increased.

We sought next to replicate the pattern of results found in this experiment by using configurations of point-lights that would allow for more meaningful comparisons. First, we made the distance between lights the same for all configurations, thus eliminating a variable that was partially confounded with the D_m/r metric. Second, we created stimuli the metrics of which comprised a ratio scale. This meant that $\Delta D_m/r$ was constant for all stepwise comparisons.

3 Experiment 2: paired comparisons for configurations with equal distance between lights

3.1 *Method*

Seven stimuli were generated with the use of the previously discussed method, and are shown in figure 6. The location of lights for each stimulus is defined by the intersection of the lines radiating from the center of the circle and the dashed lines, a and b. Stimulus 1, for example, had lights 180° apart and a metric of 0·00 as shown to the right of the figure. Only the lights were present in each event. They moved as if attached to an unseen wheel with a radius as shown in figure 6. The radius of the motion-generating wheel was a length falling between the distance of the stimulus 6 lights to the center and the center-to-lights distance for stimulus 5. Thus, the lights on stimuli 6 and 7 described curtate cycloids, and those on stimuli 1, 2, 3, 4, and 5 described prolate cycloids. None described simple cycloids. The distance between lights was equal to ab for all seven stimuli. The angle θ was chosen so that the $\Delta D_m/r$ interval between successive stimuli was equal to 0·15. The series of stimuli, therefore, formed a ratio scale with all within-step comparisons being an equivalent multiple of 0·15 as were all comparisons between steps. A test sequence was made that paired each of the seven stimuli, as both the first event and the second event, for a total of forty-two trials. A practice sequence of the ten stimulus pairs with the greatest $\Delta D_m/r$s was shown prior to the test trials.

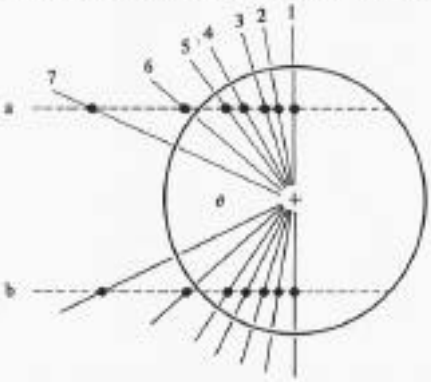

Stimulus	θ	D_m/r
1	180°	0·00
2	160°	0·15
3	144°	0·30
4	124°	0·45
5	108°	0·60
6	80°	0·75
7	50°	0·90

Figure 6. The seven stimuli used in experiment 2. Each stimulus is defined by the intersection of a pair of numbered lines and the dashed lines, a and b; θ is the angle between same numbered lines as they intersect at the center of the wheel; the motion-generating wheel for all stimuli had a radius equal to 0·8 times the distance of the stimulus 7 lights from the center; θ and D_m/r are shown for each stimulus at the right.

Thirty Wesleyan University undergraduate volunteers participated in three groups. As in experiment 1, group 1 selected the stimulus in each pair that appeared most wheel-like, group 2 did the same and was given some pretest tutoring and feedback, and group 3 chose the stimulus that hopped the most. There were ten observers in each group.

3.2 *Results and discussion*

As shown in table 2 the results for this experiment are even more robust than those for experiment 1. All combined stepwise comparisons were highly reliable as determined by t tests for paired comparisons. Groups 1 and 2 showed almost identical performance, with the stimulus of smallest D_m/r being chosen most frequently as the more wheel-like event. This trend became increasingly evident as the $\Delta D_m/r$ of the pairs became greater. The linear trend across step size was quite significant for each group ($F_{1,9} = 25\cdot1$; $p < 0\cdot001$; and $F_{1,9} = 14\cdot98$; $p < 0\cdot01$, respectively). Again, the pattern of results for group 3 was the inverse of that found for the first two. Stimuli with relatively larger D_m/r metrics were selected as having the greater hopping motion, a trend that also increased with $\Delta D_m/r$ ($F_{1,9} = 11\cdot16$; $p < 0\cdot01$).

We recognize that in this experiment the distance of the centroids from the center of the generating wheel covaries perfectly with the distance of the configurations' lights from the center. That is, as the D_m/r metric increases across stimuli so does the distance of both lights from the center. We do not believe this covariation to be a problem for our interpretation of the results for two reasons. First, the covariation

Table 2. Percentage of row stimuli chosen more than column stimuli as being more wheel-like (with or without pretest tutoring) and as hopping more.

Row	Column 2	3	4	5	6	7	Stepwise comparisons[a]	
Being more wheel-like								
1	45·0	75·0*	90·0***	95·0***	95·0***	95·0***	95·0***	(six-step)
2		70·0	100·0***	100·0***	95·0***	90·0**	92·5***	(five-step)
3			85·0***	90·0***	95·0***	85·0**	91·7***	(four-step)
4				70·0	95·0***	85·0***	92·5***	(three-step)
5					85·0**	80·0*	88·0***	(two-step)
6						85·0***	73·3***	(one-step)
Being more wheel-like: given pretest tutoring								
1	65·0	85·0***	85·0**	85·0***	90·0***	95·0***	95·0***	(six-step)
2		65·0	85·0**	100·0***	100·0***	100·0***	95·0***	(five-step)
3			65·0	80·0*	85·0***	90·0***	91·7***	(four-step)
4				60·0	80·0*	95·0***	91·5***	(three-step)
5					90·0***	90·0***	84·0***	(two-step)
6						95·0***	73·3***	(one-step)
Hopping more								
1	30·0	15·0***	0·0***	5·0***	5·0***	5·0***	5·0***	(six-step)
2		20·0*	15·0***	5·0***	5·0***	5·0***	5·0***	(five-step)
3			30·0*	15·0***	5·0***	5·0***	5·0***	(four-step)
4				45·0	30·0	10·0***	5·0***	(three-step)
5					40·0	15·0***	18·0***	(two-step)
6						15·0***	30·0***	(one-step)

* $p < 0\cdot05$; ** $p < 0\cdot01$; *** $p < 0\cdot001$; the t tests are not independent.
[a] Stepwise comparisons are computed along the diagonals of the data matrix.

of D_m/r and the distance of stimulus lights from the center did not occur in experiment 1 or in most of our other studies for which we found evidence that observers perceive the motion invariant defined by D_m/r. Second and more importantly, we tested this possibility in a previous study (Proffitt and Cutting 1979, experiments 3 and 4). There, we varied independently the distance of lights from the center of the wheel and D_m/r, and found an effect on viewers' judgments of goodness of wheel-like motion only for the latter. Thus, we felt assured in introducing such covariation in this study as it permitted us to equate the distance between the two lights in each stimulus configuration.

4 Experiment 3: drawing the path of the wheel

Consider again figure 2c, proposed as representing the perceived motions of two point-lights on an unseen rolling wheel. One way to describe this event is that the two points are 180° opposite each other on the rim of a wheel (diameter equalling the distance between points) that moves up and down as it rolls, perhaps because it is rolling over a hilly terrain. The centroid is the center of the wheel and D_m/r describes the relative vertical excursion. All events would in a sense be equally wheel-like, although the translation of each wheel would vary from linear when D_m/r equals zero, to prolate cycloids of increasing heights as D_m/r increases.

In this experiment we suggested this description to observers and asked them to draw the paths of the wheels. We anticipated that the paths would correspond to the motion of the configural centroids: D_m/r equalling zero would cause an observer to draw a horizontal line and, as D_m/r increased, the drawn line would become increasingly wavy.

4.1 *Method*

Stimuli 1 through 5 from the previous experiment were used in the testing phase, and stimulus 7 was used in one of three practice trials. As shown in figure 6, the distance between lights was equal for all stimuli. The visual angle for horizontal excursion was 8 deg. A videotaped test sequence was made of three practice trials using stimuli 3, 5, and 7, and twenty test trials consisting of four randomizations of stimuli 1 through 5. Only the last three randomizations were scored, the first five trials serving to further familiarize observers with their task, and thus there were three scored drawings by each observer of each stimulus.

Eight Wesleyan University undergraduate volunteers participated in groups of two. They were told that they would see two lights moving across the television screen and that they should consider the two lights to be mounted 180° opposite one another near the rim of a rolling wheel. Observers were instructed to draw a line on the paper given to them, such that the line represented the path of the rolling wheel. Three practice trials were presented to insure that the observers understood their task and then the twenty test trials were presented. After each trial the observer drew on a separate sheet of paper the motion path of the rolling wheel. A horizontal reference line was drawn on each sheet. Each drawing was scored by measuring the height of each peak from a line connecting the two adjacent troughs. The peak-to-trough distances were averaged for the number of peaks drawn.

4.2 *Results and discussion*

The D_m/r metric was found to be a good predictor of the relative height of the curves drawn by the observers. The mean peak-to-trough distance for each stimulus was ranked for each observer. For seven of the eight observers the mean rank-order correlation between these ranks and the ranking of the stimuli on D_m/r was quite high, $r = 0{\cdot}85$, with two of the eight having perfect rank-order correlations ($p < 0{\cdot}001$, by the binomial distribution). For these seven observers the greater the

D_m/r metric of a stimulus, the greater the vertical height of the curve drawn for its motion path. One observer unaccountably drew wavy curves for the stimuli with small D_m/rs and more level curves for those with large metrics. The rank-order correlation between the height of curves for each stimulus and D_m/r was highly negative for this observer ($r = -0{\cdot}93$). The interjudge reliability among the other seven observers was so strong, however, that even when all eight were compared the coefficient of concordance for their rankings was still very high ($W = 0{\cdot}38$; $\chi^2_4 = 18{\cdot}03$; $p < 0{\cdot}001$). With the one notable exception, the observers tended to draw paths for the stimuli as would be predicted had they drawn the paths of the configural centroids. Stimuli with small D_m/rs were drawn having smooth or slightly wavy curves, whereas those with greater metrics were drawn having quite bumpy excursions. (Visual inspection of these latter curves suggested to us prolate cycloids biased toward sinusoidal regularity.)

5 Experiment 4: drawing the contour of the terrain

So long as the rim of a wheel makes point-by-point contact with the surface upon which it is rolling, the path of its center will exactly parallel the traversed terrain. In this final experiment observers were presented the same situation as in experiment 3; however, they were asked to draw the contour of the terrain over which the wheel was rolling.

5.1 *Method*

Fourteen Wesleyan University undergraduates participated as part of a class demonstration. They all viewed the test sequence together and the visual angle for all viewers was between 1 and 2 deg, measured horizontally for the entire horizontal excursion. The experimental procedure and stimuli were exactly the same as in experiment 3 except for the instructions. The observers were told that the two lights were to be thought of as being opposite one another near the rim of a wheel that was rolling over surfaces of varying bumpyness. They were instructed to draw the contour of the terrain over which the wheel was rolling.

5.2 *Results and discussion*

Observers drew terrains that varied from level to quite hilly as D_m/r increased. For each observer the mean peak-to-trough distance for the hills was ranked for each stimulus. The mean rank-order correlation for all observers between these ranks and the ranking of stimuli on D_m/r was quite high ($r = 0{\cdot}91$). Six of the fourteen observers had perfect rank-order correlations ($p < 0{\cdot}001$, by the binomial distribution), and there were no anomalous exceptions among the observers (rs ranged from $0{\cdot}67$ to 1; $W = 0{\cdot}85$; $\chi^2_4 = 47{\cdot}9$; $p < 0{\cdot}001$). Observers drew lines for stimulus 1 ($D_m/r = 0$) that were smooth and horizontal. As D_m/r increased, hills were included that became increasingly higher with the metrics of the configurations. This relationship among the drawings was predicted from the proposal that observers would draw curves corresponding to the motion paths of configural centroids.

6 Summary and logical considerations for event perception

The results of these four experiments, as well as those for our previous work (Proffitt et al 1979; Proffitt and Cutting 1979), lend credibility to the contention that point-lights moving as if attached to a rolling wheel are perceived to revolve about the centroid of their configuration. Moreover, they are seen to move as a unified whole along the motion path described by this abstract point. When the centroid of a configuration is located at the center of the generating wheel, the motions perceived are those of a complete wheel rolling on a level surface—the points revolve about the center of their configuration that, in turn, moves along a linear path. The further the

centroid of a configuration is from the center of the generating wheel, the greater will be its relative vertical excursion as it traverses a cycloidal path. A metric was derived, D_m/r, that describes the relative up-and-down motion of the centroid of a configuration —the greater the metric, the greater the excursion. In experiments 1 and 2 stimuli were presented in pairs and the member with the smaller D_m/r metric was most frequently chosen as appearing more wheel-like; moreover, this trend became more pronounced as the difference in metrics of stimulus pairs increased. Other observers were asked to select the stimulus that appeared to hop the most. These observers tended to choose the stimulus with the larger metric, and again with a frequency that increased with the difference between the metrics of the stimulus pairs. In experiments 3 and 4, observers were told to think of the two point-lights as being directly opposite each other on a rolling wheel. When instructed to draw either the paths of the wheels or the contours of the terrain upon which they rolled, they produced curves that closely varied in vertical amplitude with the D_m/r metric.

We conclude that the perceptual system generates a description for the moving lights that yields two motion components, one being the rotational movement of the individual points about the centroid of their configuration and the other being the movement of the centroid. The dissociation of component structures from the visual scene takes on an hierarchical order (Johansson 1950; Gibson 1979). Figure 7 is a hierarchical description showing the logic of information extraction that disambiguates the visual scene into its perceived components. Elsewhere, we suggest a grammatical analogy for this description and apply it to a variety of events (Cutting and Proffitt, in press).

The visual scene presents the observer with dynamic information for which an indefinite number of interpretations could be given. This is not to say that *any* interpretation would be adequate, but rather that the set of appropriate descriptions is of indefinite number. The first distinction drawn, as we read the figure top–down and left-to-right, is between event and ground. The primacy of this distinction in the extraction of information from the visual scene, noted first by Rubin (1915), reflects the necessity of the perceptual system to pull out the information specifying objects and events from the contexts in which they are found. We prefer the term event over figure as the latter has static connotations. A ground may be divided into further events and grounds, and these constituents are bracketed to show that they are optional.

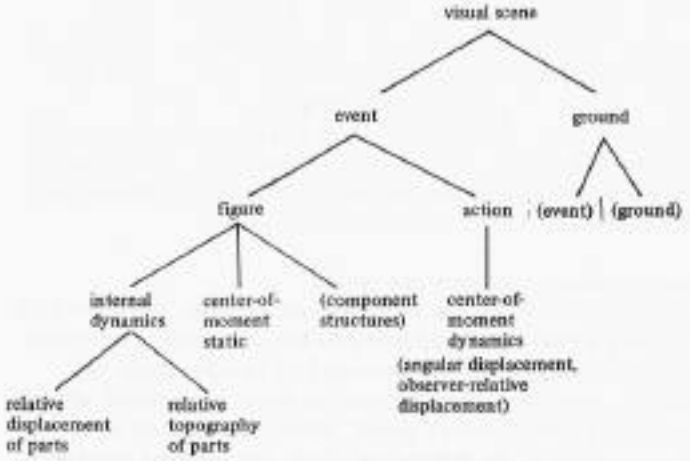

Figure 7. The perceptual system's logical ordering for information extraction. The figure, to be read top–down and left-to-right, presents the division of visual information into its perceived components.

(In our research the event was the moving point-lights and the ground was the frame provided by the television monitor as well as the rest of the information in the visual scene manifested in the dimly lit room.)

An event is comprised of two constituents, a figure and its action. Generally speaking, an event may be thought of as an object undergoing change, such as movement. If the object has no movement relative to the observer then it may be described solely as a figure; however, when an object is perceived to have a translational component then that movement is its action. A wheel that spins on an immobile axis is fully described as a figure with no action. An action component is perceived only when the whole figure undergoes observer-relative displacement. (See especially Wallach 1965/1976; Gogel 1974, 1977; Johansson 1975, 1977, 1978, for discussions of the distinction between object-relative and observer-relative displacement.) The constituents of figures are both static and dynamic invariants, whereas the properties of actions are singly dynamic. After the extraction of information selected as that specifying an event, the residual information comprises the ground. In a like manner, figural information is extracted from the event, with the residual becoming the properties of its action. Consider, for example, the event shown in figure 2. Figure 2a shows the motion paths of two point-lights undergoing wheel-generated motion. Figure 2c shows the perception—two lights revolving about their centroid and the whole hopping along a cycloidal path. The spinning of the lights around their centroid, and their relative location with respect to this center of moment, defines the figure of this event, with the residual motion of the figural center being its action.

The perceptual system derives its description of figures by placing a priority on the extraction of information defining the dynamic and static relations of parts within the event to each other. These relations are the internal dynamics of the figure. Again referring to figure 2c, we see that the movement of the two lights relative to each other is the circular motion of each about the centroid, and the relative locations fall 180° apart on the circle defined by their motion paths, with the center of moment being the configural centroid. Figures thus have two constituents, one being the relative displacement of parts and the other being their relative topography. In some instances the relative topography of parts is adequately manifested in a static scene for figural identification, a photograph of a person being an example; however, should this stimulus be reduced to a static array of point-lights located on the person's joints, figural identification becomes impossible as the information is not present in the scene to determine which lights are topographically related to which (Marey 1895/1972; Bernstein 1967; Johansson 1973, 1975, 1976; Cutting et al 1978). When the relative displacement of these lights is viewed through a dynamic presentation of the person walking, figural identification becomes obvious. Similarly with the kinetic depth effect (see especially Wallach and O'Connell 1953/1976; Green 1961) the relative topography of parts is revealed only through their coherence in movement.

To reiterate, perceived events have two motion components: relative displacement of the parts within the figure, and observer-relative displacement, or action, of the whole figure. Relative displacement of configural parts serves to define the coherence of parts and thereby the structure of the figure. These motions, unlike actions, must be periodic or the figure will be seen to change shape (Shaw et al 1974; Todd et al 1980; Cutting 1978b; Cutting and Proffitt, in press). The point-lights on a rolling wheel cycle every 360°; similarly, the point-lights on a walker have a period of identity every two-step cycle. Figural identification is facilitated by within-figure motions, but not by actions. Consider an array of point-lights located on a person's joints. Causing the array to translate with no relative displacement of parts does

nothing to improve identification; however, causing the array to manifest its internal dynamics without action, an event corresponding to a walker on a treadmill, yields prompt recognition. The motions of the joints relative to each other reveal the body's structure. Observer-relative displacement yields information, not about what a figure is, but rather about where it is going. Notice also that the internal dynamics of a stationary figure, revealed to a moving point of observation, are equivalent to those disclosed to a stationary observer viewing the figure appropriately rotated (Gibson 1979).

A rigid figure, such as the two points in figure 2, is fully described by its internal dynamics and its center of moment, here defined as a static relational entity. The center of moment coincides with the centroid of the configuration in this case. When a figure is comprised of a nesting of component structures, bracketed in figure 7 to show that this constituent is optional, the center of moment is specified by the structural mechanics of the figure. The center of moment for a human walker, for example, is a point within the torso about which the hips and shoulders move (Cutting 1978a; Cutting et al 1978). The shoulder-to-elbow, elbow-to-wrist, hip-to-knee, and knee-to-ankle systems are component structures of the human figure that are perceived as a nesting of pendulums. This perception is derived by the prior extraction of the movement of the hips and shoulders causing these points to serve as static centers of moment for the analysis of the component structures of the upper and lower body. Each step of information extraction that follows takes the previously described part as the center of moment for the determination of dynamic relations of other parts. See Cutting and Proffitt (in press) for a detailed description of the analysis of information in perceiving a human walker.

Once the internal dynamics of a figure have been extracted from the event the remaining information is perceived as the action of the figure. The motion so derived is equivalent to the dynamics of the figure's center of moment. For lights moving as if attached to a rolling wheel, the action is the motion of the centroid of their configuration. With respect to figural notation, the center of moment is a static relational entity necessary for the description of the internal dynamics of the figure's parts; however, after this information is extracted from the event, the action of the figure is perceived as the dynamics of its center of moment.

In summary, we conceive of the visual scene as a flux of ambiguous information. The perceptual system selects one description from the set of indefinite possibilities by placing priorities on the logical orderings of information extraction. The event must be distinguished from its ground and the figure within the event from its action. Events are divided into figures and actions by a process that first extracts the motions of parts relative to each other as they occur about a center of moment, and then takes the movement of this center as the description for the movement of the whole relative to the observer. Although our account is at present but a sketch of the logical steps needed to disambiguate the visual scene, our goal is to be able to make it more precise and amenable to refutation.

Acknowledgements. This research was supported by grant MH-33087 from the National Institutes of Health awarded to both authors. We thank Darryl Bruce, who suggested the design for experiments 1 and 2, and Jim Cummings, Ron Elton, Stieg Kein, and Brad Moss, who helped conduct the research.

References

Bernstein N, 1967 *The Co-ordination and Regulation of Movements* (Oxford: Pergamon Press)

Cutting J E, 1978a "Generation of synthetic male and female walkers through manipulation of a biomechanical invariant" *Perception* 7 393–405

Cutting J E, 1978b "Perceiving the geometry of age in a human face" *Perception and Psychophysics* 24 566–568

Cutting J E, Proffitt D R (in press) "Gait perception as an example of how we may perceive events" in *Perception and Perceptual Development* volume 2, Eds H L Pick Jr, R Walk (New York: Plenum Press)

Cutting J E, Proffitt D R, Kozlowski L T, 1978 "A biomechanical invariant for gait perception" *Journal of Experimental Psychology: Human Perception and Performance* **4** 357–372

Duncker K, 1937 "Induced motion" in *A Sourcebook of Gestalt Psychology* Ed. W D Ellis (London: Routledge and Kegan Paul) (originally published 1929) pp 161–172

Gibson J J, 1979 *The Ecological Approach to Visual Perception* (Boston: Houghton Mifflin)

Gogel W C, 1974 "Relative motion and the adjacency principle" *Quarterly Journal of Experimental Psychology* **26** 425–437

Gogel W C, 1977 "The metric of visual space" in *Stability and Constancy in Visual Perception: Mechanisms and Processes* Ed. W Epstein (New York: John Wiley) pp 129–181

Green B F, Jr, 1961 "Figural coherence in the kinetic depth effect" *Journal of Experimental Psychology* **62** 272–282

Johansson G, 1950 *Configuration in Event Perception* (Uppsala: Almqvist and Wiksell)

Johansson G, 1973 "Visual perception of biological motion and a model for its analysis" *Perception and Psychophysics* **14** 201–211

Johansson G, 1974 "Vector analysis in visual perception of rolling motion" *Psychologische Forschung* **36** 311–319

Johansson G, 1975 "Visual motion perception" *Scientific American* **232**(6) 76–89

Johansson G, 1976 "Spatio-temporal differentiation and integration in visual motion perception" *Psychological Research* **38** 379–393

Johansson G, 1977 "Spatial constancy and motion in visual perception" in *Stability and Constancy in Visual Perception: Mechanisms and Processes* Ed. W Epstein (New York: John Wiley) pp 375–419

Johansson G, 1978 "Visual event perception" in *Handbook of Sensory Physiology: Perception* volume VIII, Eds R Held, H W Leibowitz, H Teuber (Berlin: Springer) pp 675–711

Marey E J, 1972 *Movement* (New York: Arno Press and *The New York Times*) (originally published, 1895)

Proffitt D R, Cutting J E, 1979 "Perceiving the centroid of configurations on a rolling wheel" *Perception and Psychophysics* **25** 389–398

Proffitt D R, Cutting J E, Stier D M, 1979 "Perception of wheel-generated motions" *Journal of Experimental Psychology: Human Perception and Performance* **5** 289–302

Rubin E, 1915 *Synoplevede Figure* (Copenhagen: Gyldendalske)

Rubin E, 1927 "Visuell Wahgenommehe wirkliche bewegungen" *Zeitschrift für Psychologie* **103** 382–392

Shaw R E, McIntyre M, Mace W, 1974 "The role of symmetry theory in event perception" in *Perception: Essays in Honor of J J Gibson* Eds R B MacLeod, H L Pick Jr (Ithaca, NY: Cornell University Press) pp 276–310

Todd J T, Mark L S, Shaw R E, Pittenger J B, 1980 "The perception of human growth" *Scientific American* **242**(2) 132–144

Wallach H, 1965 "Visual perception of motion" in *The Nature and the Art of Motion* Ed. G Kepes (New York: George Braziller) pp 52–59; also in Wallach H, 1976 *On Perception* (New York: Quadrangle) pp 85–100

Wallach H, O'Connell D N, 1953 "The kinetic depth effect" *Journal of Experimental Psychology* **45** 205–217; also in Wallach H, 1976 *On Perception* (New York: Quadrangle) pp 35–56